Model XQ29/2.6 Hydraulic Sucker Rod Tong

OPERATION MANUAL



Safety Instruction

1.Operators must read and know this manual well.

2.Operators must wear work uniform, safety shoes, safety helmet, safety gloves, etc.

3.Tie the back guy according to the instruction. Don’t tie it in the wrong direction

4.Operate at the side of the tong body opening.

5.The safety door must be closed as making-up or breaking-out.

6.Don’t touch the running parts with hands when the tong is running.

7.Keep sundries out of the working area.

8.The pump should be off or the hydraulic tong power shut down as maintaining or changing the jaw plates, die seats or tong dies.

9.Over-pressure and over-torque are forbidden.

10.Don’t add or dismount any parts to the tong.

SAFETY FIRST, STANDARD OPERATION PROBLEMS MAY OCCUR IF BUGS ARE NOT RID OF.

CONTENTS

1.Summary……1
2.Specification……1
3.Installation……1
4.Hydraulic circuit……1
5.Operation……2
6.Maintenance&Lubrication……3
7.The numbers of vulnerable parts……3
8.Ordinary problems and troubleshooting guide……4
9.Figures and detailed part tables……4
9.1Assembly and parts list……5
9.2Master tong and parts list……6
9.2.1Shell and accessories and parts list……7
9.2.2Tong head cover assy. and parts list……9
9.2.3Baking, resetting and centralizing mechanism and parts list……10
9.2.4Transmission and parts list……12
9.2.5Shifter assembly and parts list……14
9.2.6Safety door assembly and parts list……15
9.2.7Hand control valve and parts list……16
9.3Backup tong and parts list……18
9.3.1Front guide pole and parts list……19
9.4Hanger assembly and parts list……20
10.Trucking, Storage and After Service……21

1.Summary

Model XQ29/2.6 hydraulic power tong is an improved type of XQ29/1.8 which is used to make up and break out sucker rod thread in Well Service. This product has the following features:

●The structure is compact ,concise and light. Master tong is driven by low speed large torque hydraulic motor which matching with manual control valve. The backup tong just like a spanner.

●The operating is briefness and convenience with die. Put the respondence size jaw set into master tong and the respondence size glutting into backup tong , turning the reset knob in correct direction then can make up and break out sucker rod by operating manual control valve. Two speed, snapping at low speed, spinning at high speed .

●Large low gear torque, especially suitable for the instance that is difficult to break out sucker rod thread.

2.Specification

●Application Range	Sucker Rod GYG16,19,22,25,29
●High Gear Rated Torque	1.0kN.m (700ft.lbs)
●Low Gear Rated Torque	2.6kN.m (1900ft.lbs)
●High Gear Maximum Rotation Speed	98 r/min
●Low Gear Maximum Rotation Speed	32 r/min
●Opening of Tong Head	62 mm (2.4″)
●Overall Dimension :L×W×H(mm)	686×415×516(27″×16.3″×20.3″)
●Weight(kg)	106 (234lbs)
●Rated system Pressure(MPa)	10 (1450PSI)
●Max Oil Supply(L/min)	80 (21GPM)

3.Installation

●Hanging: Connect mechanical lift assembly (2.6.DT.0) with tong hanger of master tong and hang the lift assembly on the mast of workover rig. The hanging point is 15m above ground and the hanging should be in free condition. The distance between tong center and the center of the well is recommended to be about 0.5m ,just the Jaw set of the master tong meet the quadrate of sucker rod above the hoop. Adjust the distance between the tong and backup tong, to get the quadrate of Spanner Head meet the quadrate of sucker rod below the hoop.

●Level: Adjust the screw(2.6.Z-89) to level the Master tong and backup tong. If it is not leveled, it will cause malfunction .

●Tying: Tie one end of cable or chain on mast and the other end on pin shaft of back guide seat (2.6.Z-34) of power tong. The cable or chain should be capable of bearing a load of 2 ton. The cable or chain should be at a right angle to the tong and on the opposite side of the operator of the tong. This insures a safe operation.

●Pressure hoses: Power supply hose line marked “P”, the return hose line marked “O” (See Figure 9.2. The hose’s internal diameter could not less than Φ20 mm.

4.HYDRAULIC CIRCUIT

Figure 1 is the figure of hydraulic circuit of power tong Manual control valve(3) controls power tong hydraulic motor (1). Hydraulic motor drives tong head to make up and brake out sucker rod. Pressure gauge (4) shows the pressure in the hydraulic circuit. The figure 2 is the correspondence of pressure and torque . Line A is low gear rated torque ,line B is high gear rated torque.

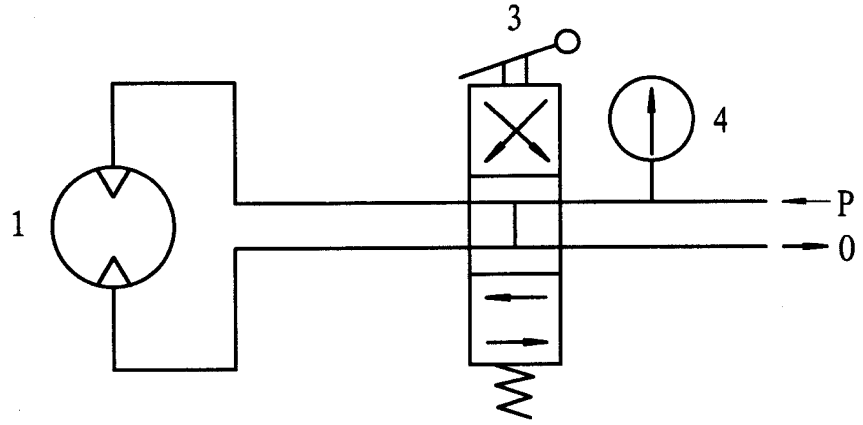

Fig. 1

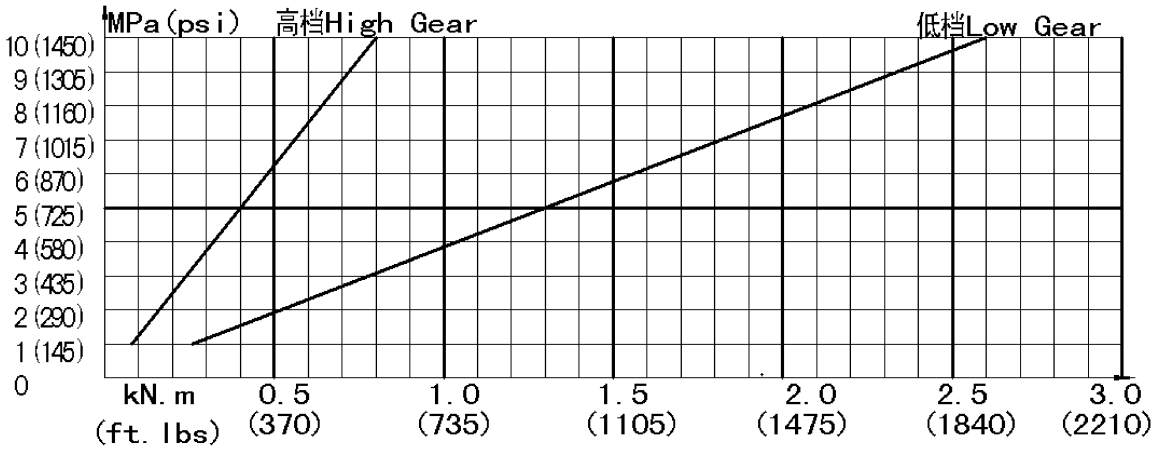

Fig. 2

5.OPERATION

5.1 Adjusting The Distance Of The Backup Tong and Master Tong

Put the cotter pins(2.6.B-15) into the suitable holes of front guide pole(2.6.B-22) and rear guide pole(2.6.B-20). Insure the master tong' jaw and backup' tong head align with the collar' cube of upper and under sucker rods, make the backup tong remains level in the same time.

5.2Gear Shifting Operation

Operation the manual control valve, make the power tong move slightly. Push inward makes the tong rotate in forward direction. Pull outside makes the tong rotate in reverse direction. High gear is available when push down the shifting handle (2.6.Z.3-8).Low gear is available when uplift the shifting handle. The shifting should be done at low speed in order to avoid damaging of the gears.

5.3Making-up Operation

After aligning the openings of the master and backup tong head turn the rest knob (2.6.Z-54) and make the arrow

point the direction for makeup. Move the tong to pipe string. Make the dies of master tong and the upper sucker rod aligned at one center. Operate the control valve to make the tong heads rotate along the direction for makeup. After the pipe is made up. Reversely rotate the tong heads by operating the control valve to align the openings. Then move the tong off the pipe string.

5.4Breaking-out Operation

After aligning the opening of the tong heads with the opening of the housing. Turn the reset knob (2.6.Z-54) and make the arrow point the direction for beak out move the tong to the pipe sting. Operate the control valve to make the tong heads rotate along the direction for backing off and the pipe is backed off. Align the openings by rotating reversely the tong heads. Then, move the tong off the pipe string.

5.5Replacing Die and Glutting

Replace die and glutting in the condition of the master tong opening aligning at one line. There are locating holes on the outside edge of the master tong. A small screw driver or drive tool (Diameter less than Φ8 mm) must be pushed into inside of the tong head. Make the jaw set assembly（2.6.Z.1-2）close to the center of the tong head. The die will expose, then hook off the Retaining Pin(2.6.Z.1-5).When this is accomplished ,the die will slide out of the jaw set unit easily. Press down Retaining Pin (2.6.Z.1-5) then can Replace the glutting.

Correspondence Between Die, glutting and sucker rod

Sucker Rod	Jaw Set	Glutting
CYG16	16-22	16
CYG 19,22	16-22	19-22
CYG 25	25	25
CYG 29	29	29

6.MAINTENANCE & LUBRICATION

●After every transportation, it is necessary to wash master tong and backup tong with kerosene or diesel oil and inject grease to oil cups of machine body, jaw set and jaw set bracket on master tong and backup tong, the surface of open gears.

●Every three months in work, remove the cover plate(2.6.Z-69) and inject lubrication grease to gears' surfaces.

●After every use, clear water and oil dust in tong immediately and keep the equipment clean.

●After every use in well service, it is necessary to inject lubricating grease to every rotary pin shaft.

●Do not use vapor to clear tong in case the inner part loses oil or water enters into the inner part which may cause damage to parts.

●The temperature of hydraulic oil should not be over 65℃. The over heat will make the seal of hydraulic pressure system out of order.

●Hydraulic oil must be kept clean and filter must be cleaned regularly. If the hydraulic oil has been dirty, it must be changed without delay.

●Hydraulic oil selected

Low solidifying point hydraulic oil YC-N46, application ambient temperature range: -20 ~ +40℃.

Waterproof hydraulic oil YB-N46,application ambient temperature range: -10 ~ +40℃

Ordinary hydraulic oil YA-N46, application ambient temperature range: 0 ~ +40℃.

Users can take hydraulic oil, lubricating grease and lubricating oil by themselves in accordance with local

condition.

7.The numbers of vulnerable parts

●The master tong: 2.6.Z-4 2.6.Z-5 2.6.Z-7 2.6.Z-39 2.6.Z-41 2.6.Z-51 2.6.Z.1-6

●Backup tong: 2.6.B-6

8.ORDINARY PROBLEMS AND TROUBLESHOOTING GUIDE

Ordinary Troubles	Cause	Remedy
Master tong die set slippage.	1. Jaw sets are selected improperly.	Change suitable jaw set.
	2. Jaw sets are much worn.	Change new die jaw set.
	3. The brake moment of tong head is a little small, make the jaw set not stretch.	Tighten spring properly or change braking plate.
	4. The tong body is not level.	Level tong body.
Backup tong could not clip sucker rod.	1. Glutting are selected improperly.	Change suitable glutting.
	2. Glutting are much worn.	Change new glutting.
	3.The tong body is not level.	Level tong body.
Head of master tong doesn't align with the opening of housing.	Retaining pins are not wrapped by reset knob shaft.	Turn reset knob then reset.
Engaging a gear is not firm and it drops out easily.	Locking effort is a little small.	Add adjusting pad and increase the pressure of spring.
Jaw set does not retract.	Jaw set's shape has changed because of high system pressure .	Adjust the system pressure in proper range. Change jaw set.

9.GURES AND DETAILED PART TABLES

9.1Assembly and parts list（Fig1，Table 1）

9.2Master tong and parts list（Fig 2，Table 2）

9.2.1Shell and accessories and parts list（Fig 3，Table 3）

9.2.2Tong head cover assy. and parts list（Fig 4，Table 4）

9.2.3Baking, resetting and centralizing mechanism and parts list（Fig 5，Table 5）

9.2.4Transmission and parts list（Fig 6，Table 6）

9.2.5Shifter assembly and parts list（Fig 7，Table 7）

9.2.6Safety door assembly and parts list（Fig 8，Table 8）

9.2.7Hand control valve and parts list（Fig 9，Table 9）

9.3Backup tong and parts list（Fig 10，Table 10）

9.3.1Front guide pole and parts list (Fig.11 Tabe11)

9.4Hanger assembly and parts list（Fig 12，Table 12）

9.1 Assembly and parts list（Fig 1,Table 1）

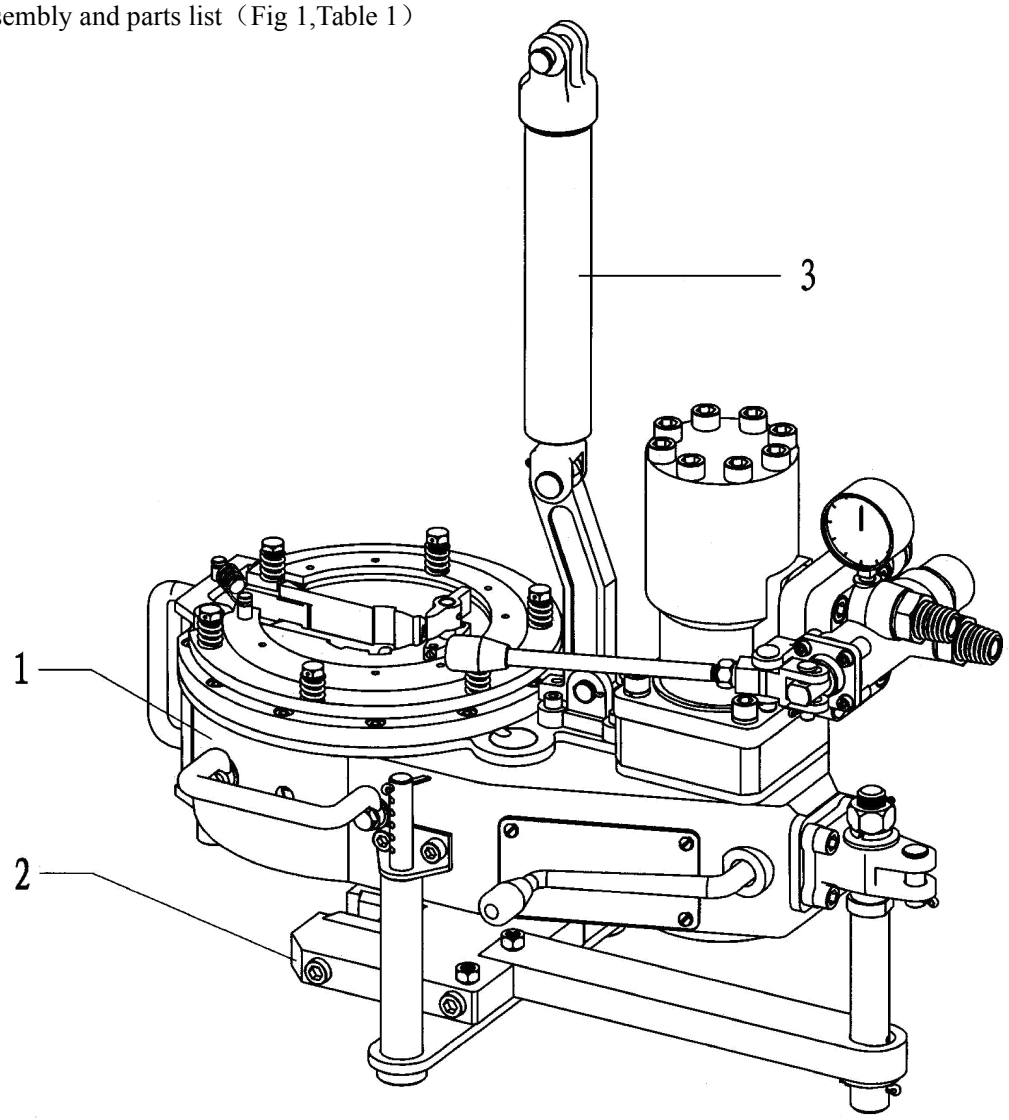

Fig.1

Table 1. Assembly parts list

Item	P/N	Drawing NO.	Description	Qty
1	2.6.Z.0	XYQ2.6.Z	Master tong	1
2	2.6.B.0	XYQ2.6.B	Backup tong	1
3	2.6.DT.0	XYQ1.8.DT.0	Lift assembly	1

9.2 Master tong and parts list（Fig 2,Table2）

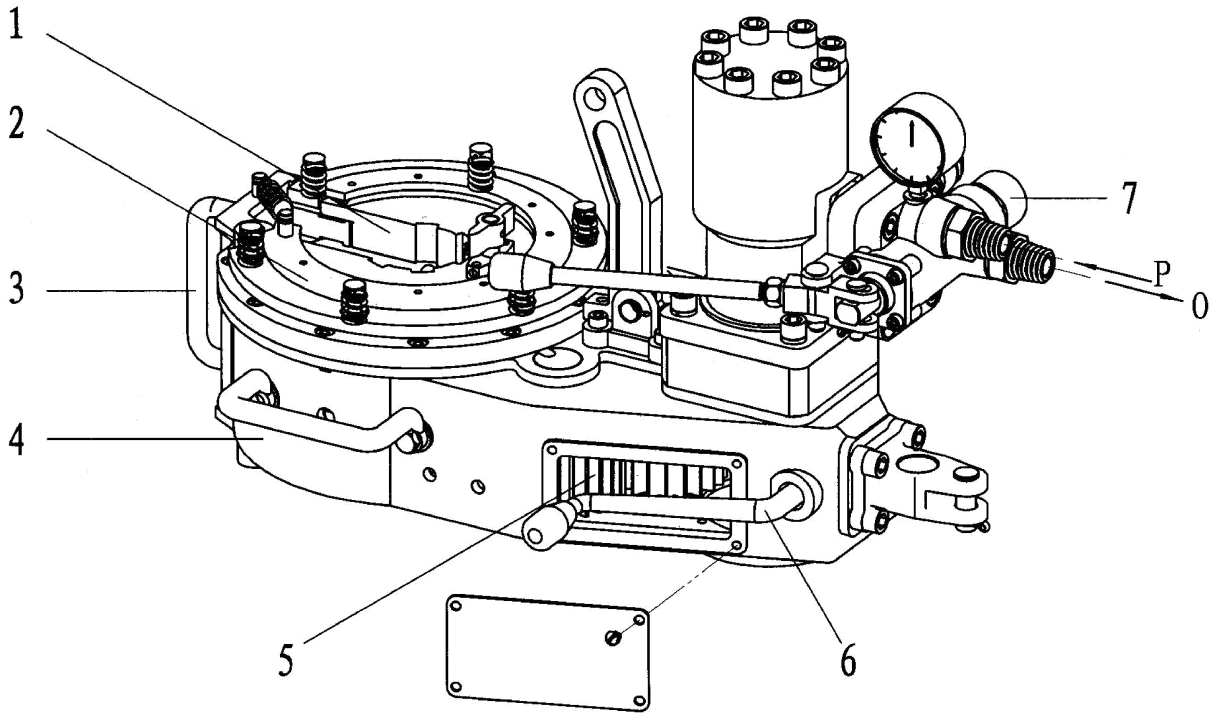

Fig.2

Table 2. Master tong parts list

Item	P/N	Drawing NO.	Description	Qty
1	2.6.Z-2	XYQ2.6.Z.1	Tong head assembly	1
2	2.6.Z-100		Tong head cover assy.	1
3	2.6.Z-101		Safety door and its fittings	1
4	2.6.Z-102		Shell and its fittings	1
5	2.6.Z-103		Transmission gear and its fittings	1
6	2.6.Z-88	XYQ2.6.Z.3	Shifter assembly	1
7	2.6.Z-95	XYQ3C.Z.5	Manual reversing and pressure regulating valve	1

9.2.1 Shell and accessories and parts list（Fig.3,Table 3）

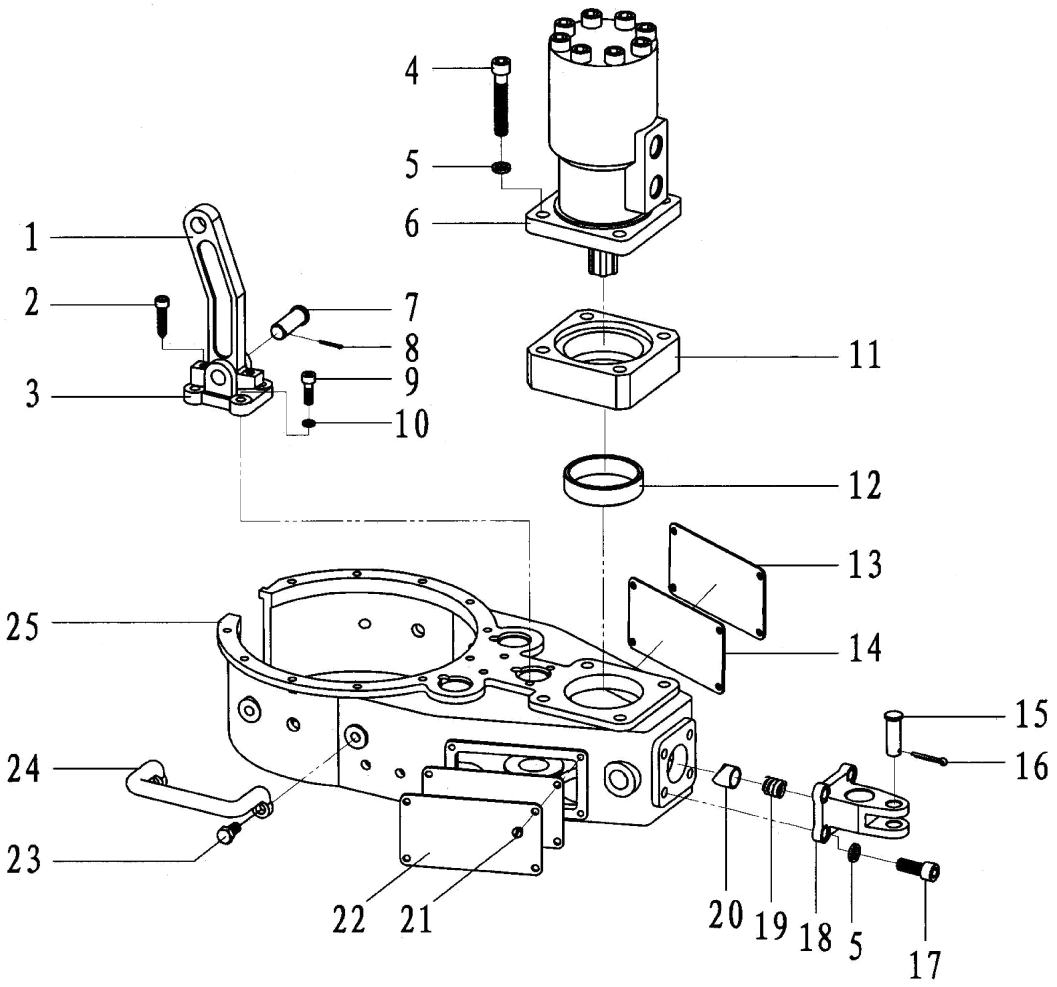

Fig. 3

Table 3. Shell and Accessories parts list

Item	P/N	Drawing NO.	Description	Qty
1	2.6.Z-47	XYQ3B.Z-30	Hanger Rod	1
2	2.6.Z-89	XYQ3C.Z-50	Jackscrew	2
3	2.6.Z-66	XYQ3C.Z-38	Suspension set	1
4	2.6.Z-73	GB/T70	Hexagon socket cap screws M12×70-8.8	4
5	2.6.Z-38	GB/T93	Standard spring washer 12	8
6	2.6.Z-46		Cycloid Hydraulic Motor BM3-315	1
7	2.6.Z-67	XYQ3C.Z-39	Pin shaft	1
8	2.6.Z-68	GB/T91	Cotter pin2.5×20	1
9	2.6.Z-70	GB/T70	Hexagon socket cap screws M8×25-8.8	4
10	2.6.Z-71	GB/T93	Standard spring washer 8	4
11	2.6.Z-44	XYQ2.6.Z-23	Connecting plate(2)	1
12	2.6.Z-20	XYQ3C.Z-12	Motor sleeve	1
13	2.6.Z-84	XYQ2.6.Z-29	Name plate	1
14	2.6.Z-69	XYQ1.8.Z-26	Baffle	2
15	2.6.Z-35	XYQ1.8.Z-20	Guy pin	1
16	2.6.Z-36	GB/T91	Cotter pin 4×25	1
17	2.6.Z-37	GB/T70	Hexagon socket cap screws M12×30-8.8	4
18	2.6.Z-34	XYQ1.8.Z-19	Rear guide rod seat	1
19	2.6.Z-33	XYQ3C.Z-21	Spring	1
20	2.6.Z-32	XYQ3C.Z-20	Slider	1
21	2.6.Z-72	GB/T65	Slotted cylindrical head screw M6×10	8
22	2.6.Z-92	XYQ2.6.Z-30	Torque indicating plate	1
23	2.6.Z-1	GB/T5782	Hexagon socket head screw M10×20-8.8	4
24	2.6.Z-62	XYQ3C.Z.3-2	Front handle	2
25	2.6.Z-3	XYQ2.6.Z-1	Shell	1

9.2.2 Tong head assy. and parts list（Fig 4,Table 4）

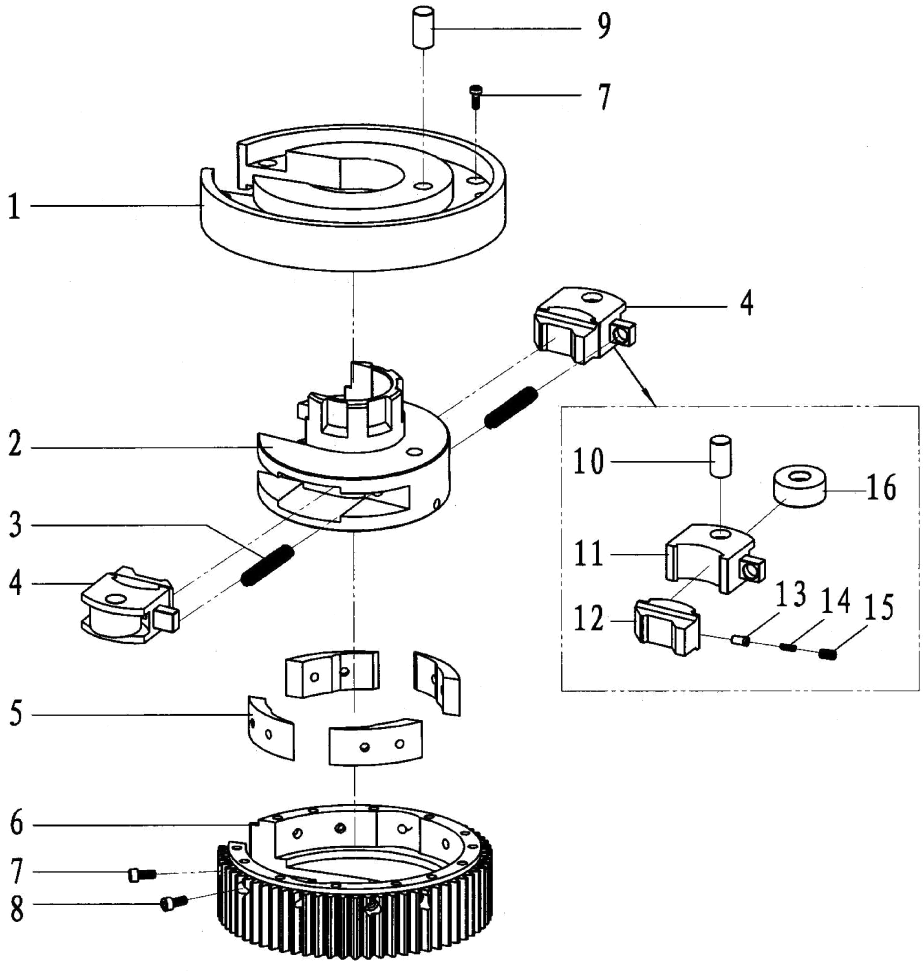

Fig.4

Table 4　Tong head assy. parts list

Item	P/N	Drawing NO.	Description	Qty
1	2.6.Z.1-12	XYQ2.6.Z.1-9	Open gear cover	1
2	2.6.Z.1-1	XYQ2.6.Z.1-1	Jaw bracket	1
3	2.6.Z.1-8	XYQ1.8.Z.1-8	Spring	2
4	2.6.Z-104		Jaw assembly	
5	2.6.Z.1-10	XYQ2.6.Z.1-7	Ramp	4
6	2.6.Z.1-11	XYQ2.6.Z.1-8	Open gear	1
7	2.6.Z.1-9	GB/T70	Hexagon socket cap screws M8×16-8.8	17
8	2.6.Z-105	GB/T70	Hexagon socket cap screws M8×14-8.8	4
9	2.6.Z.1-15	XYQ3C.Z.1-2	Retaining pin	1
10	2.6.Z.1-3	XYQ2.6.Z.1-3	Roller shaft	2
11	2.6.Z.1-2	XYQ2.6.Z.1.1	Jaw body assembly	2
12	2.6.Z.1-6	XYQ2.6.Z.1-5(1)～(3)	Die(1-3)	Each2
13	2.6.Z.1-5	XYQ3C.Z.1-15	Retaining pin	6
14	2.6.Z.1-13	XYQ3C.Z.1-14	Spring	6
15	2.6.Z.1-14	GB/T77	Hexagon socket set screws with flat point	6
16	2.6.Z.1-4	XYQ2.6.Z.1-4	Roller	2

9.2.3 Braking, Resetting and Centralizing Mechanism and parts list（Fig.5,Table 5）

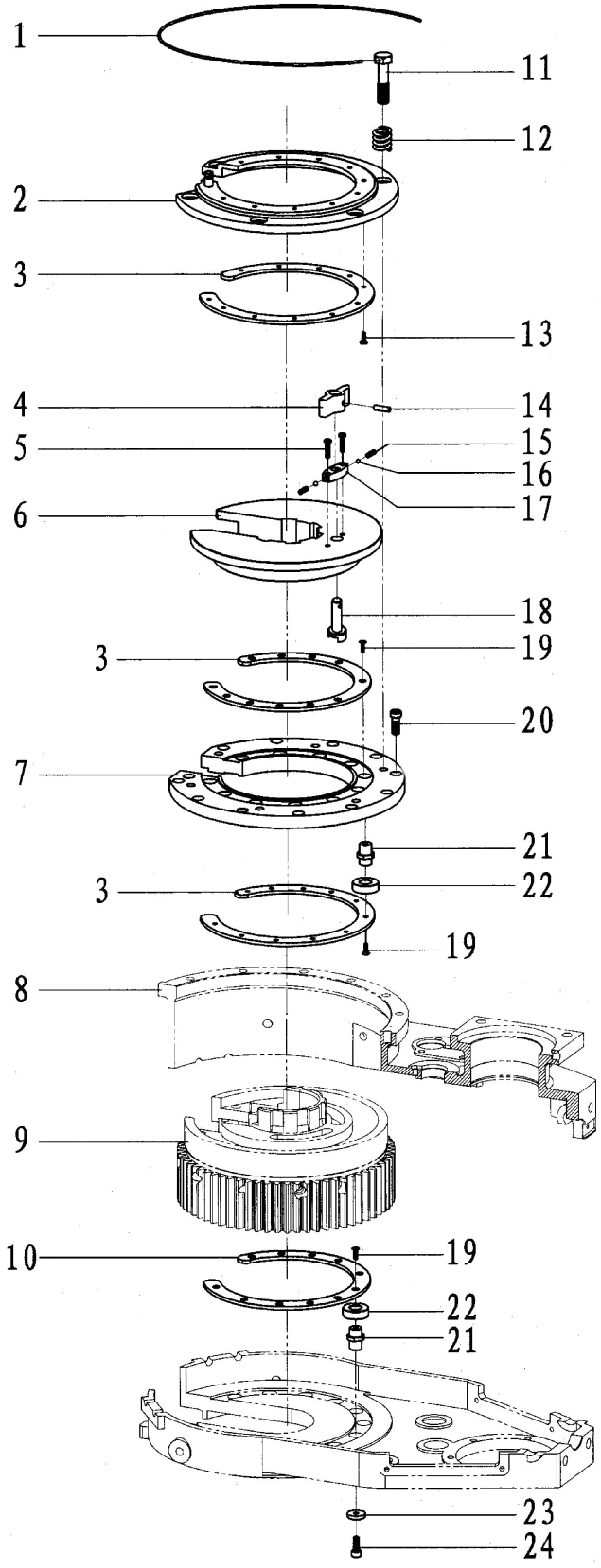

Fig. 5

Table 5. Braking, Resetting and Centralizing Mechanism parts list

Item	P/N	Drawing NO.	Description	Qty
1	2.6.Z-106		Steel wire Φ2×700	1
2	2.6.Z-50	XYQ2.6.Z.5	Braking plate	1
3	2.6.Z-51	XYQ2.6.Z-14	Friction disc	3
4	2.6.Z-54	XYQ3C.Z-32	Reset knob	1
5	2.6.Z-60	GB/T65	Slotted cheese head screwM5×20	2
6	2.6.Z-53	XYQ2.6.Z-15	Connecting plate(1)	1
7	2.6.Z-49	XYQ2.6.Z-12	Tong head cover	1
8	2.6.Z-3	XYQ2.6.Z-1	Tong case	1
9	2.6.Z-2	XYQ2.6.Z.1	Tong case assy.	1
10	2.6.Z-5	XYQ1.8.Z-3	Support plate	1
11	2.6.Z-61	GB/T32.1	Hexagon socket head screwM10×40	6
12	2.6.Z-33	XYQ3C.Z-21	Spring	6
13	2.6.Z-52	GB/T819	Cross recessed countersunk head screw M5×8	11
14	2.6.Z-55	GB119-86	Cylindrical pin5×18	1
15	2.6.Z-59	XYQ3C.Z-35	Spring	2
16	2.6.Z-58	GB/T308	Steel ballΦ5	2
17	2.6.Z-57	XYQ3C.Z-34	Position seat	1
18	2.6.Z-56	XYQ2.6.Z-16	Reset knob	1
19	2.6.Z-6	GB/T819	Cross recessed countersunk head screw M5×10	34
20	2.6.Z-48	GB/T70	Hexagon socket cap screwsM8×20-8.8	11
21	2.6.Z-7	XYQ2.6.Z-3	Centralizing roll axle	23
22	2.6.Z-4	XYQ2.6.Z-2	Centralizing roll	23
23	2.6.Z-8	GB/T892	Retaining ring B18	12
24	2.6.Z-9	GB/T70	Hexagon socket head screwM5×16-8.8	12

9.2.4 Transmission and parts list（Fig. 6,Table 6）

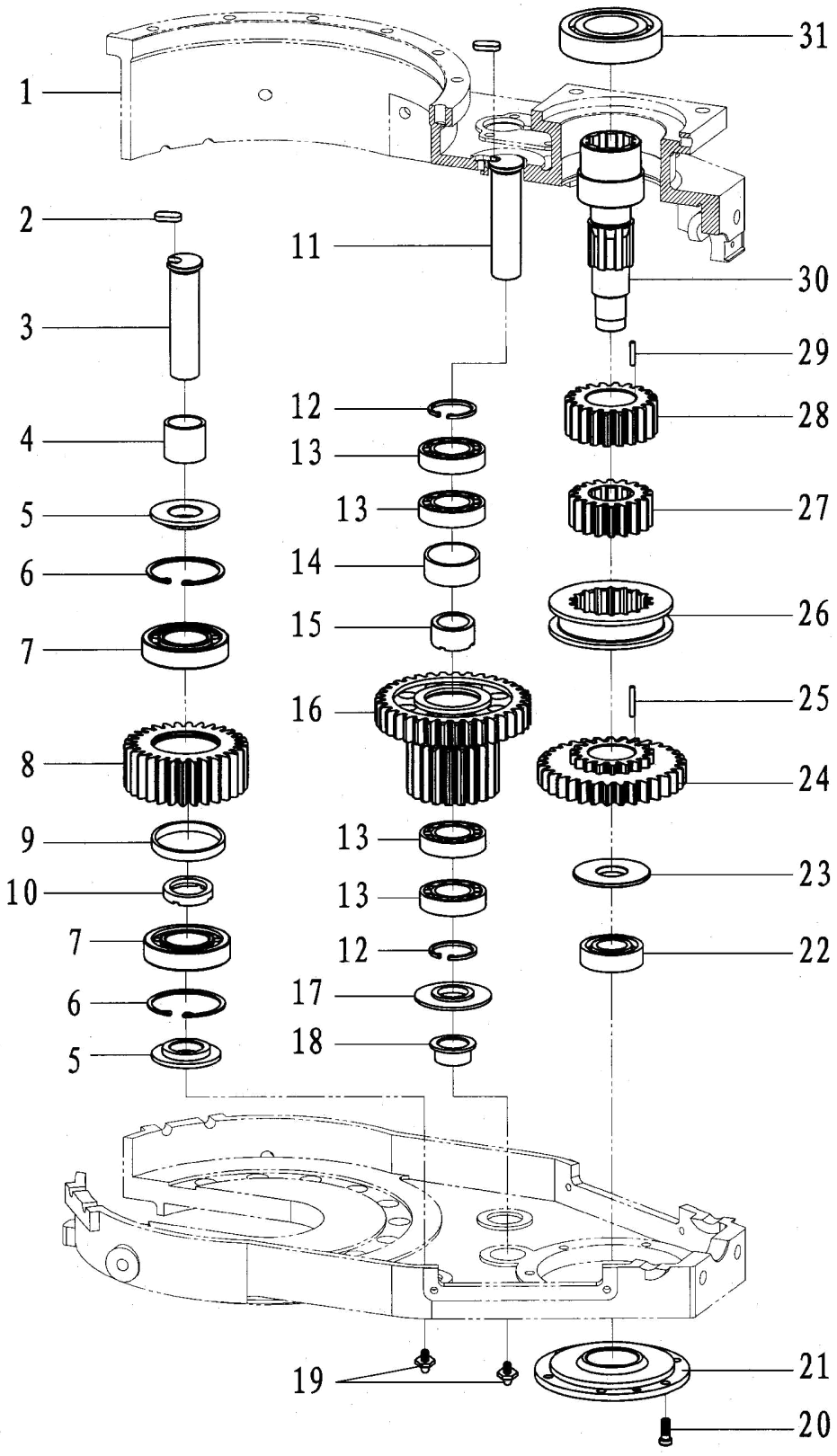

Fig.6

Table 6. Transmission parts list

Item	P/N	Drawing NO.	Description	Qty
1	2.6.Z-3	XYQ2.6.Z-1	Shell	1
2	2.6.Z-10	XYQ1.8.Z-25	Key	3
3	2.6.Z-77	XYQ2.6.Z-18	Idler gear shaft	2
4	2.6.Z-76	XYQ2.6.Z-17	Shaft sleeve(3)	2
5	2.6.Z-78	XYQ2.6.Z-19	Bearing disc	4
6	2.6.Z-79	GB/T893.1	Circlip of hole 62	4
7	2.6.Z-80	GB/T283	single row cylindrical rolling bearings NJ206E	4
8	2.6.Z-81	XYQ2.6.Z-20	Idler gear	2
9	2.6.Z-82	XYQ2.6.Z-21	Shaft sleeve(4)	2
10	2.6.Z-83	XYQ2.6.Z-22	Shaft sleeve (5)	2
11	2.6.Z-19	XYQ2.6.Z-7	Shaft of duplex gear	1
12	2.6.Z-17	GB/T893.1	Circlip for hole 47	2
13	2.6.Z-14	GB/T276	Deep groove ball bearing 6005	4
14	2.6.Z-12	XYQ2.6.Z-5	Shaft sleeve (1)	1
15	2.6.Z-13	XYQ2.6.Z-6	Shaft sleeve (2)	1
16	2.6.Z-11	XYQ2.6.Z-4	Duplex gear	1
17	2.6.Z-15	XYQ3C.Z-9	Bearing disc(1)	1
18	2.6.Z-16	XYQ3C.Z-10	Bearing disc (2)	1
19	2.6.Z-18	GB/T1152	Oil capM8×1	3
20	2.6.Z-31	GB/T70	hexagon socket cap screws M6×16-8.8	6
21	2.6.Z-30	XYQ2.6.Z-11	Bottom cover	1
22	2.6.Z-28	GB/T276	Deep groove ball bearing 6204	1
23	2.6.Z-25	XYQ1.8.Z-17	Bearing disc	1
24	2.6.Z-24	XYQ2.6.Z.2	Clutch gear unit	1
25	2.6.Z-39	GB/T309	Needle pin 4×25.8	22
26	2.6.Z-21	XYQ1.8.Z-12	Internal gear	1
27	2.6.Z-23	XYQ2.6.Z-9	Spline gear	1
28	2.6.Z-22	XYQ2.6.Z-8	Shifting gear	1
29	2.6.Z-41	GB/T309	Needle roll4×31.8	22
30	2.6.Z-26	XYQ2.6.Z-10	Power input axle	1
31	2.6.Z-43	GB/T276	Deep groove ball bearing 6208	1

9.2.5 Shifting assembly and parts list（Fig. 7,Table 7）

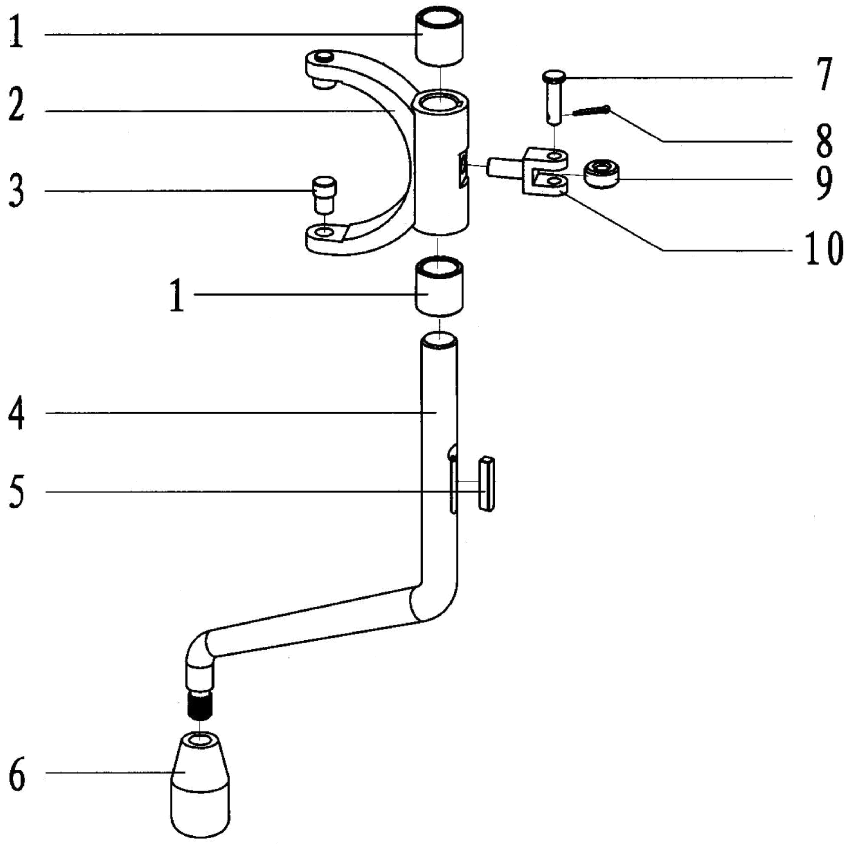

Fig.7

Table 7. Shifter assembly parts list

Item	P/N	Drawing NO.	Description	Qty
1	2.6.Z.3-1	XYQ1.8.Z.3-1	Sleeve	2
2	2.6.Z.3-2	XYQ1.8.Z.3-2	Shift Fork	1
3	2.6.Z.3-9	XYQ1.8.Z.3-5	Sliding Block	2
4	2.6.Z.3-8	XYQ2.6.Z.3-1	Shift Fork Shaft	1
5	2.6.Z.3-7	XYQ1.8.Z.3-3	Ball knob	1
6	2.6.Z.3-10	XYQ3C.Z.5-10	Handle	1
7	2.6.Z.3-4	XYQ3C.Z.6-4	Roller Shaft	1
8	2.6.Z.3-5	GB/T91	Cotter Pin 2×10	1
9	2.6.Z.3-3	XYQ3C.Z.6-3	Roller	1
10	2.6.Z.3-6	XYQ3C.Z.6-5	Roller seat	1

9.2.6 Safety Door Assembly and parts list (Fig 8,Table 8）

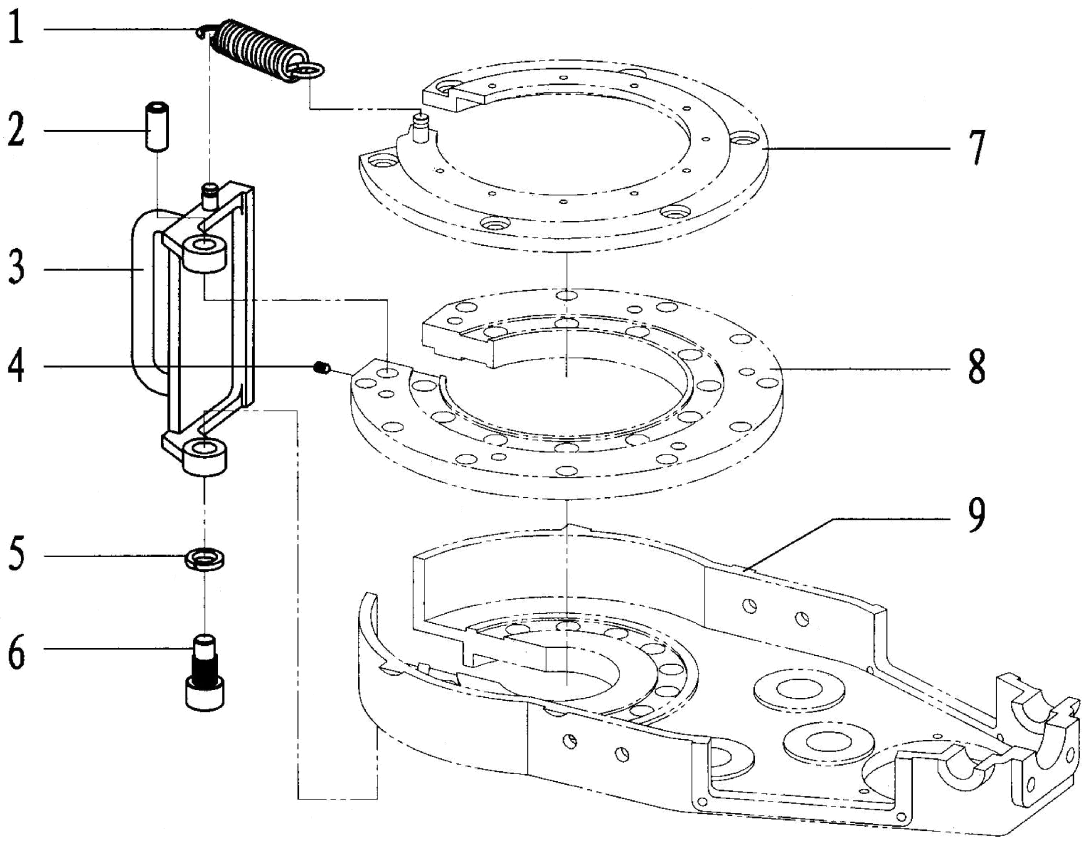

Fig. 8

Table 8. Safety Door Assembly parts list

Item	P/N	Drawing NO.	Description	Qty
1	2.6.Z-91		Pulling spring 18	1
2	2.6.Z-74	XYQ2.6.Z-28	Door axle(2)	1
3	2.6.Z-65	XYQ2.6.Z.4	Door body	1
4	2.6.Z-75	GB/T71	Slotted cone point fastening screwM6×16	1
5	2.6.Z-64	GB/T93	Standard spring waher16	1
6	2.6.Z-63	XYQ2.6.Z-25	Door axle(1)	1
7	2.6.Z-50	XYQ2.6.Z.5	Braking plate	1
8	2.6.Z-49	XYQ2.6.Z-12	Tong head cover	1
9	2.6.Z-3	XYQ2.6.Z-1	Shell	1

9.2.7 Hand control valve and parts list（Fig. 9,Table 9）

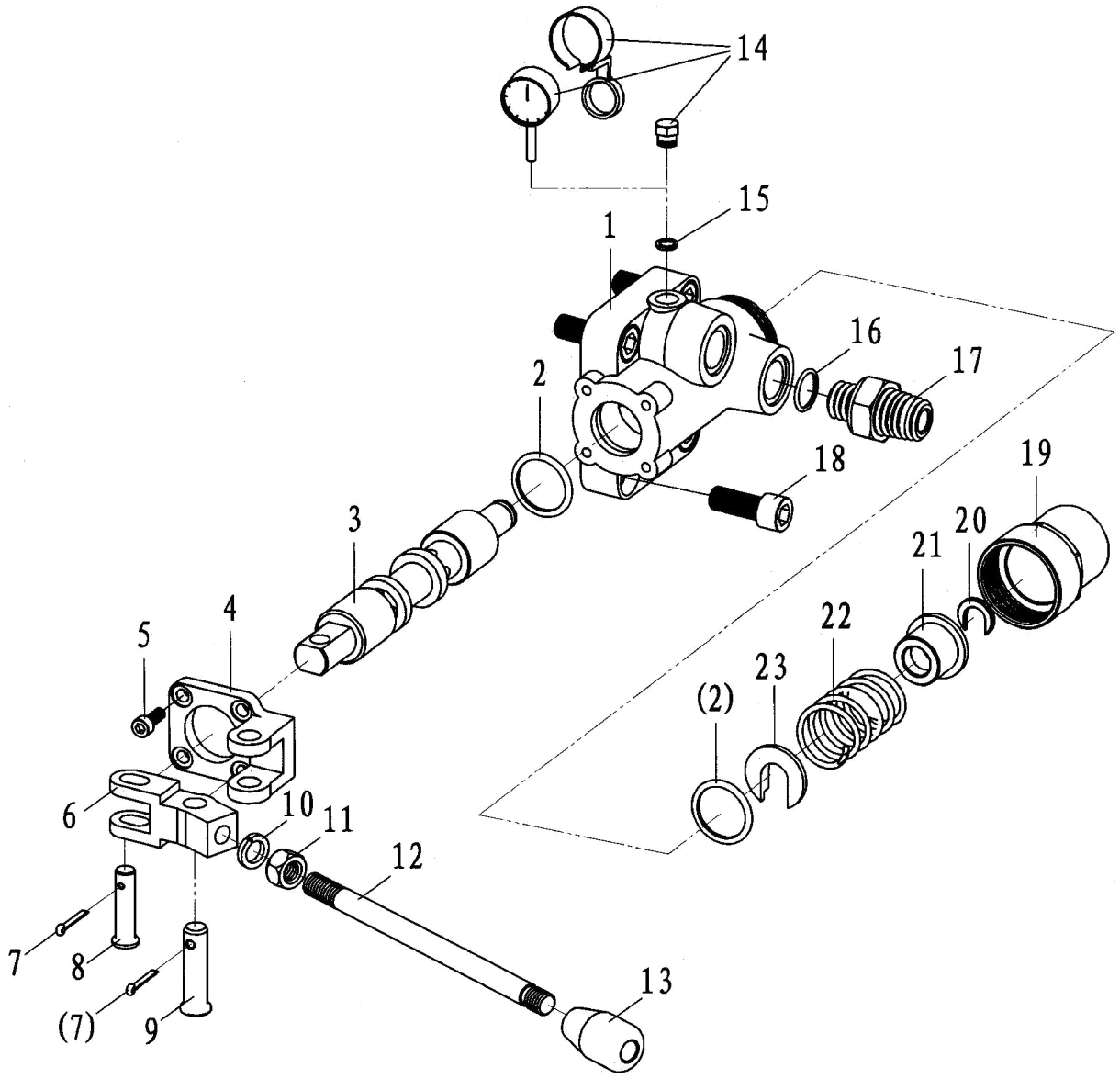

Fig. 9

Table 9. Hydraulic motor and its control valve and fittings parts list

Item	P/N	Drawing NO.	Description	Qty
1	2.6.Z-110	XYQ3C.Z.5-1	Valve body	1
2	2.6.Z-111	GB1235-76	O-Ring 36×3.5	2
3	2.6.Z-112	XYQ3C.Z.5.1	Combination valve core	1
4	2.6.Z-113	XYQ3C.Z.5-7	Support seat	1
5	2.6.Z-31	GB/T70	Hexagon socket head screwM6×16	4
6	2.6.Z-115	XYQ3C.Z.5-8A	Fork	1
7	2.6.DT-9	GB/T91	Cotter pin3.2×20	2
8	2.6.Z-117	GB/T882	Pin shaft B10×40	1
9	2.6.Z-118	GB/T882	Pin shaft B12×45	1
10	2.6.Z-38	GB/T93	Standard spring washer12	1
11	2.6.Z-120	GB/T6170	Hexagon nut M12	1
12	2.6.Z-121	XYQ3C.Z.5-9	Control lever	1
13	2.6.Z-122	XYQ3C.Z.5-10	Ball knob	1
14	2.6.Z-123	XYQ3C.Z.5-12	Stopper	1
	2.6.Z-124		Pressure gage0～16MPa	1
	2.6.Z-125	BZ.0A	Pressure gage assembly	1
15	2.6.Z-126	XYQ3C.Z.5-18	Copper washer	1
16	2.6.Z-127	GB1235-76	O-Ring 26×2.4	2
17	2.6.Z-128	XYQ3C.Z-24	Tail connector (1)	2
18	2.6.Z-37	GB/T70	Hexagon socket head screw M12×30	4
19	2.6.Z-130	XYQ3C.Z.5-2	Valve tail seat	1
20	2.6.Z-131	XYQ3C.Z.5-6	Restricting ring	1
21	2.6.Z-132	XYQ3C.Z.5-5	Spring seat (2)	1
22	2.6.Z-133	XYQ3C.Z.5-4	Spring	1
23	2.6.Z-134	XYQ3C.Z.5-3	Spring seat (1)	1

9.3 Backup tong and parts list（Fig. 10,Table 10）

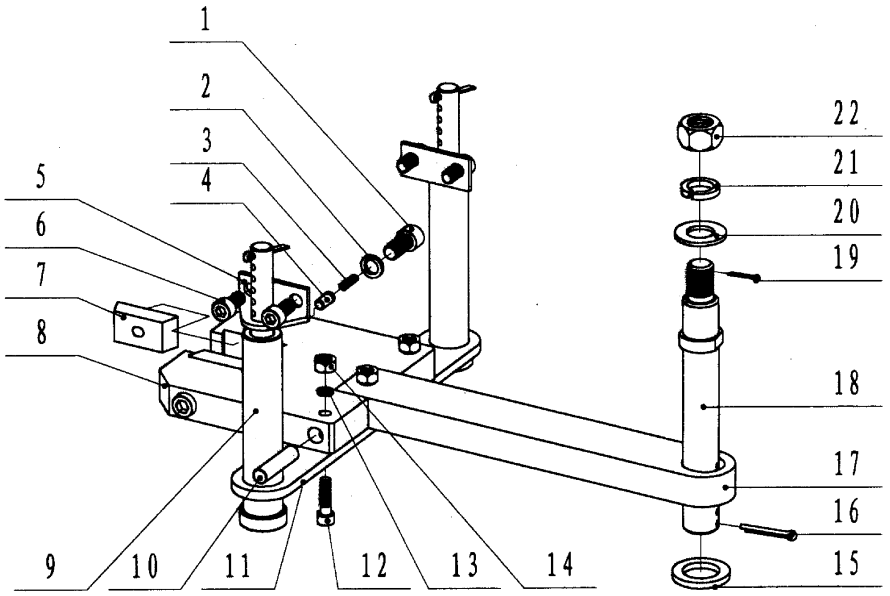

Fig. 10

Table 10. Backup tong parts list

Item	P/N	Drawing NO.	Description	Qty
1	2.6.B-9	GB/T70	Hexagon socket head cap screwsM12×25-8.8	2
2	2.6.Z-38	GB/T93	Standard spring washer12	2
3	2.6.Z.1-13	XYQ3C.Z.1-14	Spring	2
4	2.6.Z.1-5	XYQ3C.Z.1-15	Backing pin	2
5	2.6.B-12	XYQ2.6.B-5	Upper supporting seat	2
6	2.6.B-13	GB/T70	Hexagon socket head cap screw M10×20-8.8	4
7	2.6.B-6	XYQ2.6.B-3(1)-(4)	Glutting (1)-(4)	Each2
8	2.6.B-4	XYQ2.6.B-1	Spanner head	1
9	2.6.B-22	XYQ1.8.QD.0	Front guide pole	2
10	2.6.B-14	XYQ2.6.B-6	Pin shaft	2
11	2.6.B-11	XYQ2.6.B-4	Connecting plate	1
12	2.6.B-1	GB/T70	Hexagon socket head cap screws M8×45-8.8	3
13	2.6.Z-71	GB/T93	Standard spring 8	3
14	2.6.B-3	GB/T6170	Hexagon nut M8	3
15	2.6.B-16	XYQ2.6.B-7	Washer	1
16	2.6.B-15	GB/T91	Cotter pin5×35	1
17	2.6.B-5	XYQ2.6.B-2	Spanner handle	1
18	2.6.B-20	XYQ2.6.B-8	Rear guide pole	1
19	2.6.B-21	GB/T91	Cotter pin 2.5×25	1
20	2.6.B-18	GB/T95	Flat washer20	1
21	2.6.B-19	GB/T93	Standard spring washer 20	1
22	2.6.B-17	GB/T6170	Hexagon nut M20	1

9.3.1Front guide pole assy. and parts list（Fig.11,Table 11）

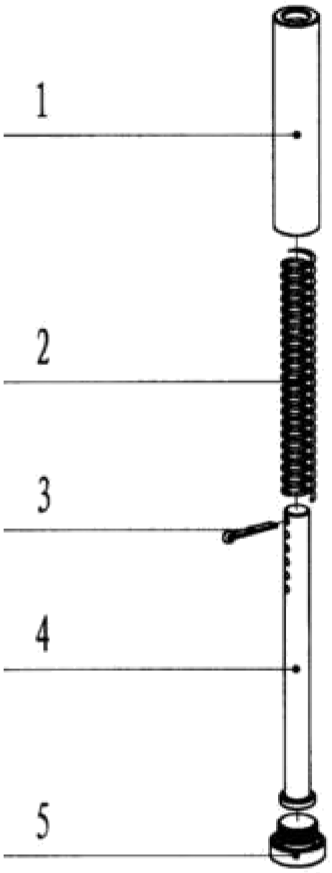

Fig. 11

Table 11 Front guide pole parts list

Item	P/N	Drawing NO.	Description	Qty
1	2.6.B.1-1	XYQ1.8.QD-4	Front guide pole cover	2
2	2.6.B.1-2	XYQ1.8.QD-3	Spring	2
3	2.6.B.1-3	GB/T91	Cotter pin4×20	2
4	2.6.B.1-4	XYQ1.8.QD-2	Front guide pole	2
5	2.6.B.1-5	XYQ1.8.QD-1	Front guide pole seat	2

9.4Hanger assy. and parts list（Fig.12,Table 12）

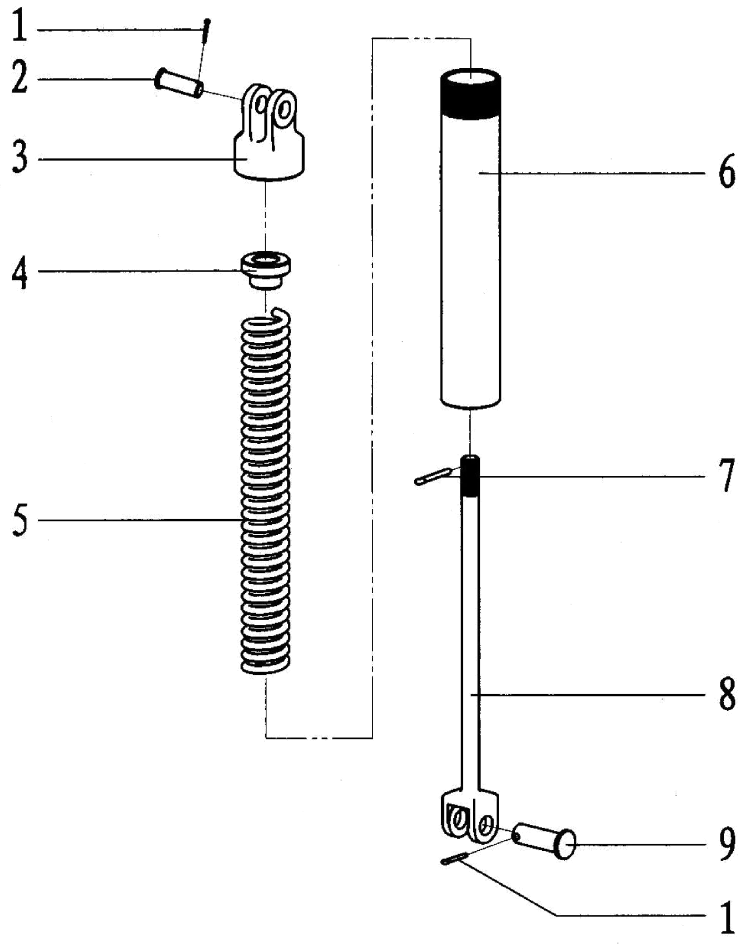

Fig. 12

Table 12. Hanger assy. parts list

Item	P/N	Drawing NO.	Description	Qty
1	2.6.DT-9	GB/T91	Cotter pin3.2×20	2
2	2.6.DT-1	GB/T882	Pin shaft B14×40	1
3	2.6.DT-2	XYQ1.8.DT-1	Lifting lug	1
4	2.6.DT-3	XYQ1.8.DT-2	Spring seat	1
5	2.6.DT-6	XYQ1.8.DT-3	Spring	1
6	2.6.DT-5	XYQ1.8.DT.1	Hanger	1
7	2.6.DT-4	GB/T119	Cylindrical pin4×20	1
8	2.6.DT-7	XYQ1.8.DT.2	Boom	1
9	2.6.DT-8	GB/T882	Pin shaftB16×45	1

10.Trucking, Storage and After Service

10.1 Trucking

When you move hydraulic power tong, you should move it smoothly and keep it from wet, and don't put it upside to downside and also keep it from damage. When it is lifted, use steel wire rope with the diameter 12mm or bigger, and to keep it in balance. Don't incline and swing it too much, to keep it from attacking other things avoiding damaged.

10.2 Storage

XYQ3C hydraulic power tong should be placed in where is no sunshine, prevent rain, wet proof, good airing and the environment temperature below 45 0c. Don't storage it in a muddy place or outdoors. Protect oil inlet and outlet well to prevent some sundries in. The storage period is general one year for new hydraulic power tong. It can be used after one-year storage but all the sealing parts and hoses must be changed.

10.3 Unpacking

Check the appearance of hydraulic power tong and check and accept it as packing list.